Better FTTx, Better Life.

September, 2026

Technical Information

FCST-CR120-TSP Flare End

M:+86 18720624696
Email:sales@fcst.com
Tel:+86-21-38726791 38726792

www.fcst.com

www.microductcoupler.com

FCST-CR120-TSP Flare End

The fiber optic raceway Flared End is a flared guide component installed at raceway entry/exit points or atop cabinets. Featuring a funnel-like design, it expands the raceway port to guide optical cables smoothly in and out, preventing excessive compression or mechanical abrasion at the entry point.

- For 120mm fiber optic raceway.
- Easy installation; secure mounting.
- Large bend radius for cable protection.
- Flared design for smooth cable entry/exit.
- Compliant with the UL94-V0 fire safety standard.

Product Specifications

Construction	Description
Material	ABS
Flame-retardant Rating	V0
Packaging	150PCS/CNT 20.4KG
Weight	136g

Product Structure

Unit:mm

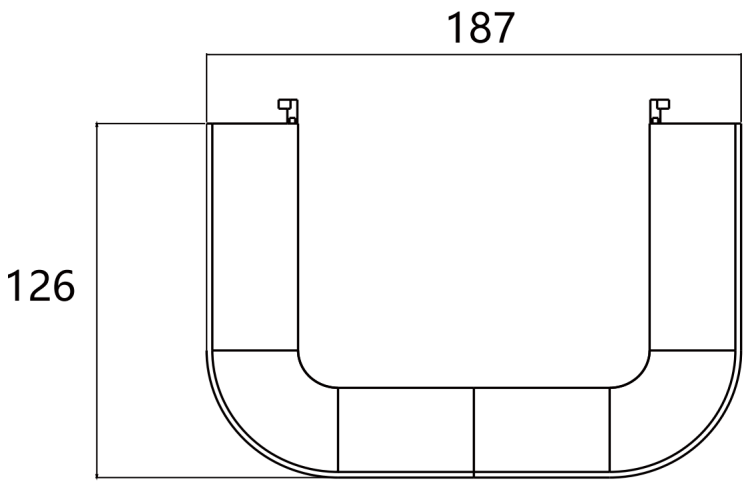

Better FTTx, Better Life.

Fiber Cable Solution Technology Co.,Ltd.

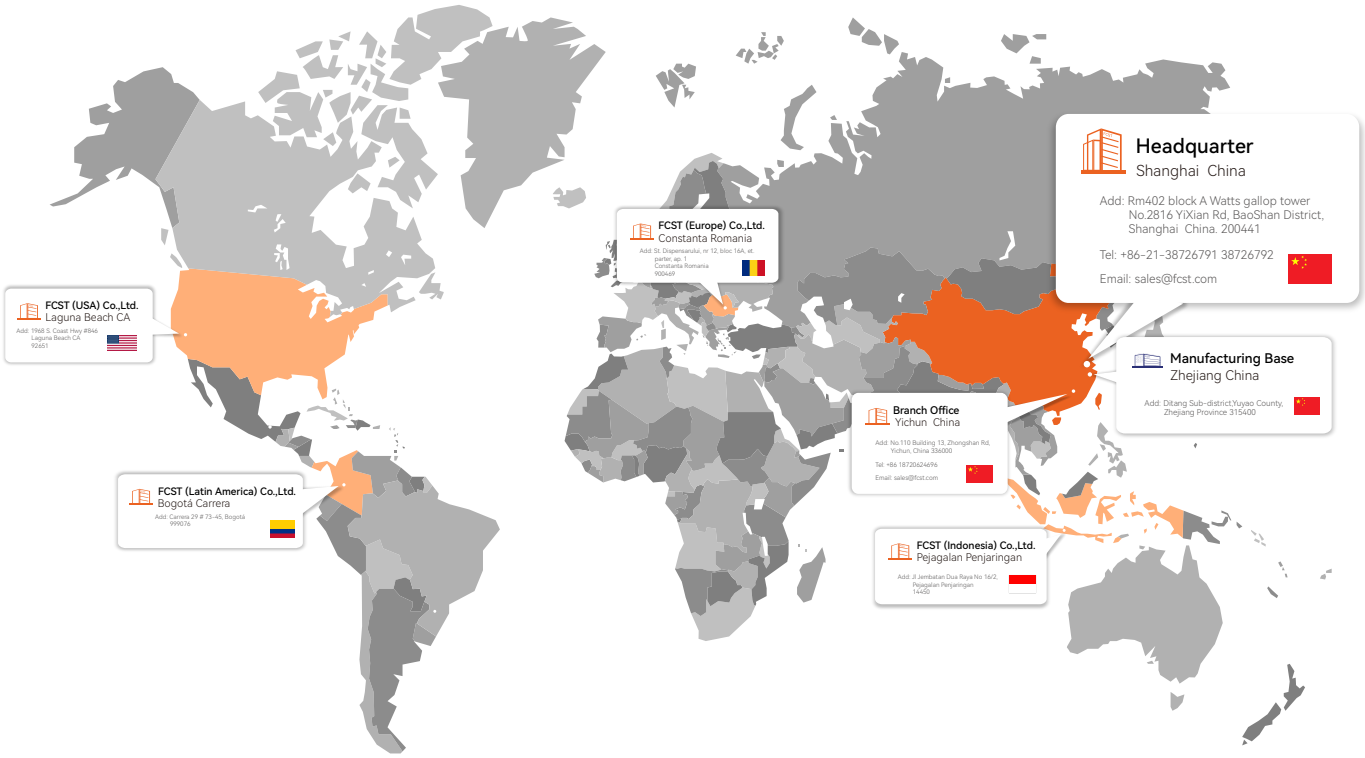

FCST - Better FTTx, Better Life.

At FCST, we manufacture top-quality microduct connectors, microduct closure, telecom manhole chambers and fiber splice boxes since 2003. Our products boast superior resistance to failure, corrosion, and deposits, and are designed for high performance in extreme temperatures. We prioritize sustainability with mechanical couplers and long-lasting durabili-ty.

FCST aspires to a more connected world, believing everyone deserves access to high-speed broadband. We're dedicat-ed to expanding globally, evolving our products, and tackling modern challenges with innovative solutions. As technology advances and connects billions more devices, FCST helps developing regions leapfrog outdated technologies with sustainable solutions, evolving from a small company to a global leader in future fiber cable needs.

Rm402 block A Watts gallop tower No.2816 YiXian Rd, BaoShan District, Shanghai 200441.
Tel:+86-21-38726791 +86-21-38726792 Fax:+86-21-38726793

www.fcst.com www.microductcoupler.com